SPORTJET 460

LENGTH	4.59m (±1%)
BEAM	2.01m (±1%)
DRAFT (FULLY LOADED)	0.43m
ENGINE	Rotax 1630 ACE iDF
PEAK POWER	170hp ≡ 127kW
DRY WEIGHT	615kg
SEATING CAPACITY	6
FUEL	PETROL
FUEL CAPACITY	100L
MAX. SPEED	48mph ≡ 77kph
No. TUBE COMPARTMENTS	5
CE DESIGN CATEGORY	C

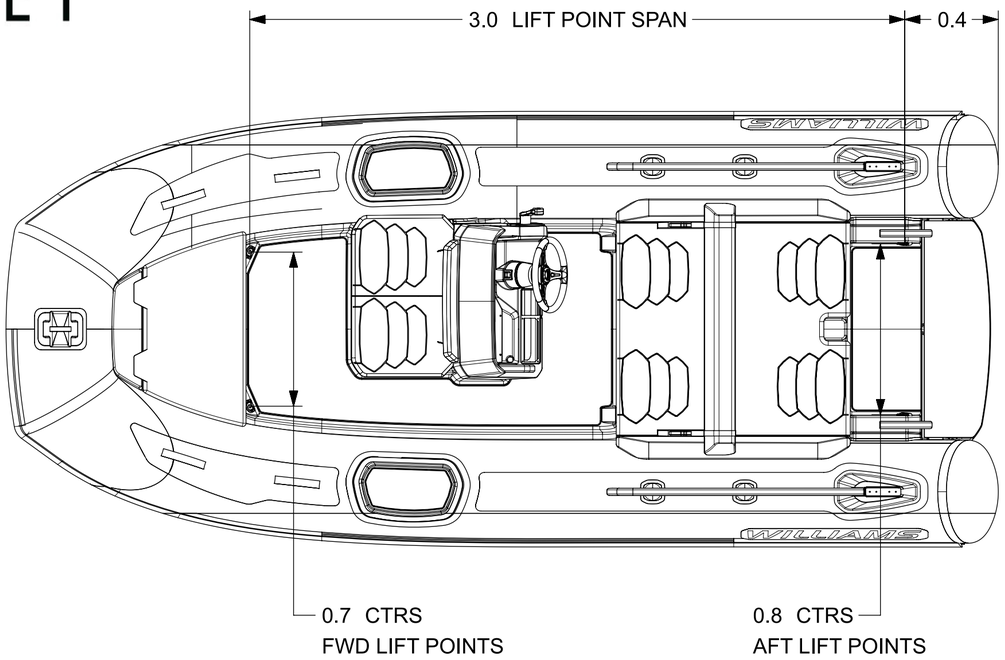

NOTES:

1. LENGTH / BEAM TOLERANCE DUE TO VARIATION IN TUBE AIR PRESSURE.

2. AVERAGE DRY WEIGHT STATED;
ACTUAL WEIGHT DEPENDENT ON OPTIONS FITTED.

3. LOW PROFILE:
   - DEFLATED TUBES (AUTO BOW TUBE INFLATOR REQUIRED*).
   - QUICK RELEASE STEERING WHEEL.
   - FOLDABLE HELM.

4. REFER TO DWG RD2196 FOR CHOCK PROFILES.

5. ALL DIMENSIONS IN METERS.

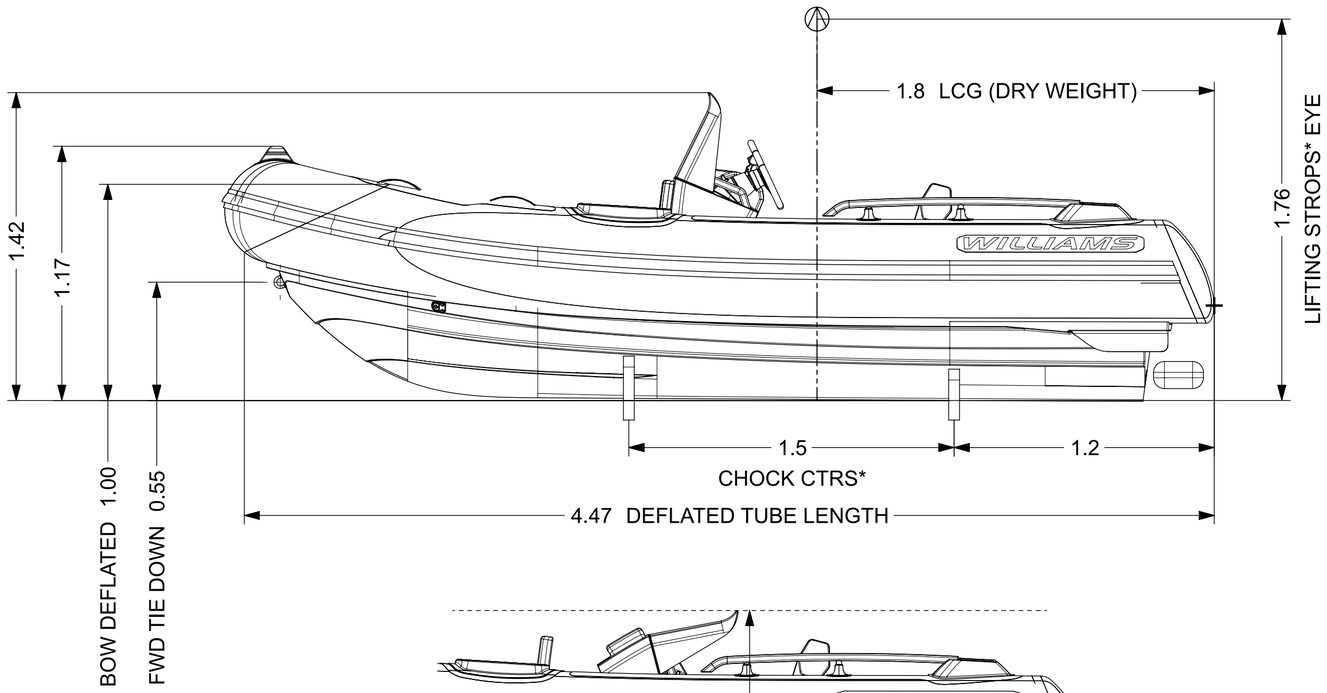

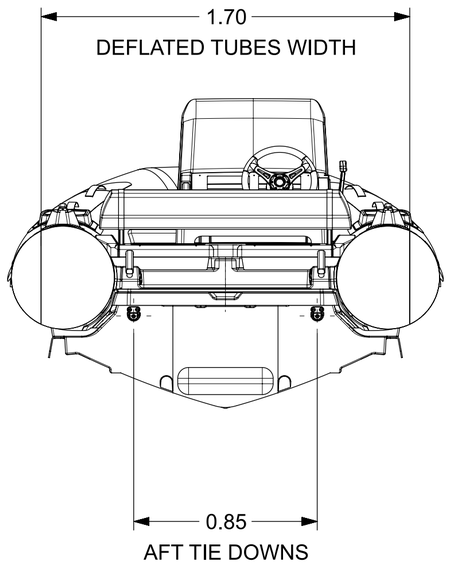

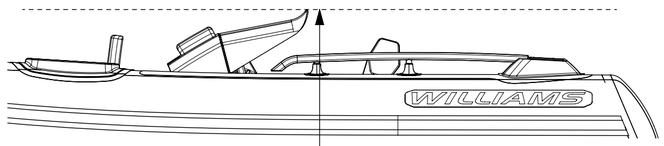

*OPTIONAL ACCESSORY

REV.	DATE	DETAILS	DRAWN	APPV'D
1	05/06/26	DOCUMENT CREATION	AM	FZ

NOT FOR PUBLICATION - THIS DRAWING IS THE PROPERTY OF WILLIAMS JET TENDERS LTD. AND IS ISSUED ON CONDITION THAT IT IS NOT COPIED, RE-PRINTED OR DISCLOSED EITHER WHOLLY OR IN PART TO ANY THIRD PARTY NOT AUTHORISED TO RECIEVE IT

GENERAL TOL.
0 ±0.50
0.0 ±0.25
0.00 ±0.10
0° ±0.50°

REMOVE ALL BURRS & BREAK SHARP EDGES
GENERAL SURFACE FINISH Ra 1.6UM
DIMENSIONS IN MM UNLESS STATED
DO NOT SCALE DRAWING

	NAME	DATE
DRAWN	AM	05/06/2026
APPV'D	FZ	05/06/2026

PROJECT:
INSPECTION LEVEL:
MATERIAL & FINISH

WILLIAMS

TITLE
SPORTJET 460 (2027MY)

PART NO. WPT-000460SJ-P96-2027MY-DATASHEET_dwg1 A2

SCALE 1:20 SHEET 1 OF 1