TURBOJET 320MX

LENGTH O.A.	3.19m (±1%)
BEAM O.A.	1.62m (±1.5%)
DRAFT (LOAD DEPENDANT)	0.22m / 0.33m
ENGINE	Rotax ACE 90 ECT
PEAK POWER	90hp ≡ 66.19kW
DRY WEIGHT	255kg
SEATING CAPACITY	4
FUEL	PETROL
FUEL CAPACITY	28L
MAX. SPEED	45mph ≡ 72kph
No. TUBE COMPARTMENTS	4
CE DESIGN CATEGORY	C

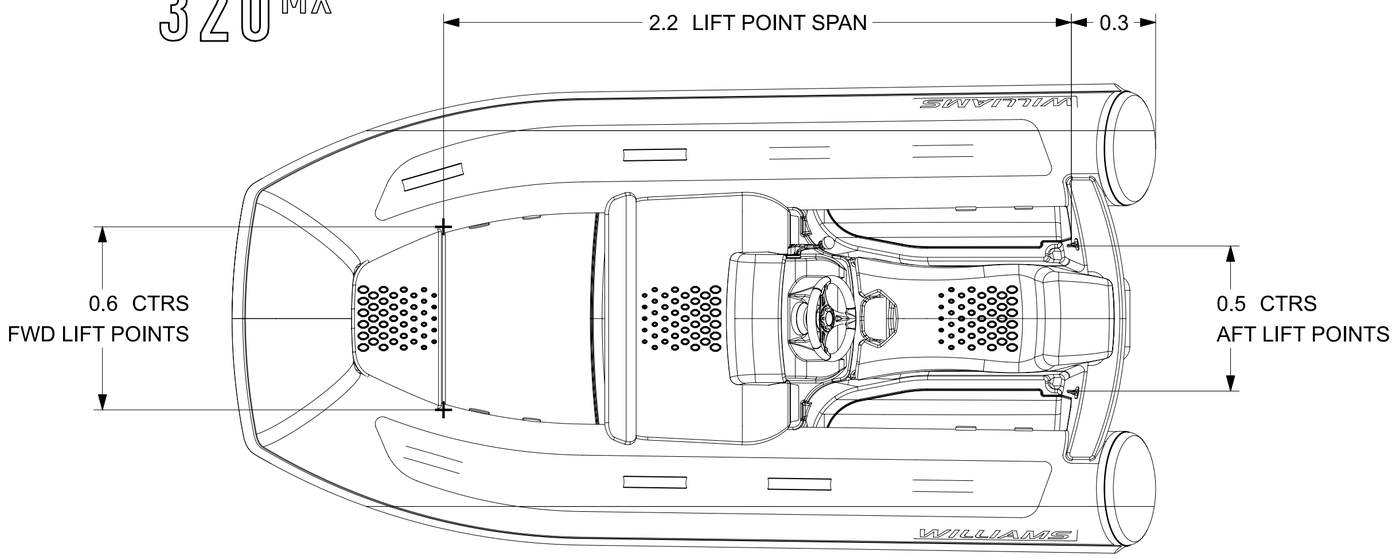

NOTES:

1. LENGTH / BEAM TOLERANCE DUE TO VARIATION IN TUBE AIR PRESSURE.

2. AVERAGE DRY WEIGHT STATED;
   ACTUAL WEIGHT DEPENDENT ON OPTIONS FITTED.

3. LOW PROFILE SPEC:
   - REMOVE STEERING WHEEL (QUICK RELEASE TYPE REQUIRED*)
   - DEFLATE TUBES.

4. CHOCK PROFILE'S DRAWING: RD927
   CHOCKS* PART NUMBER: 99-0926

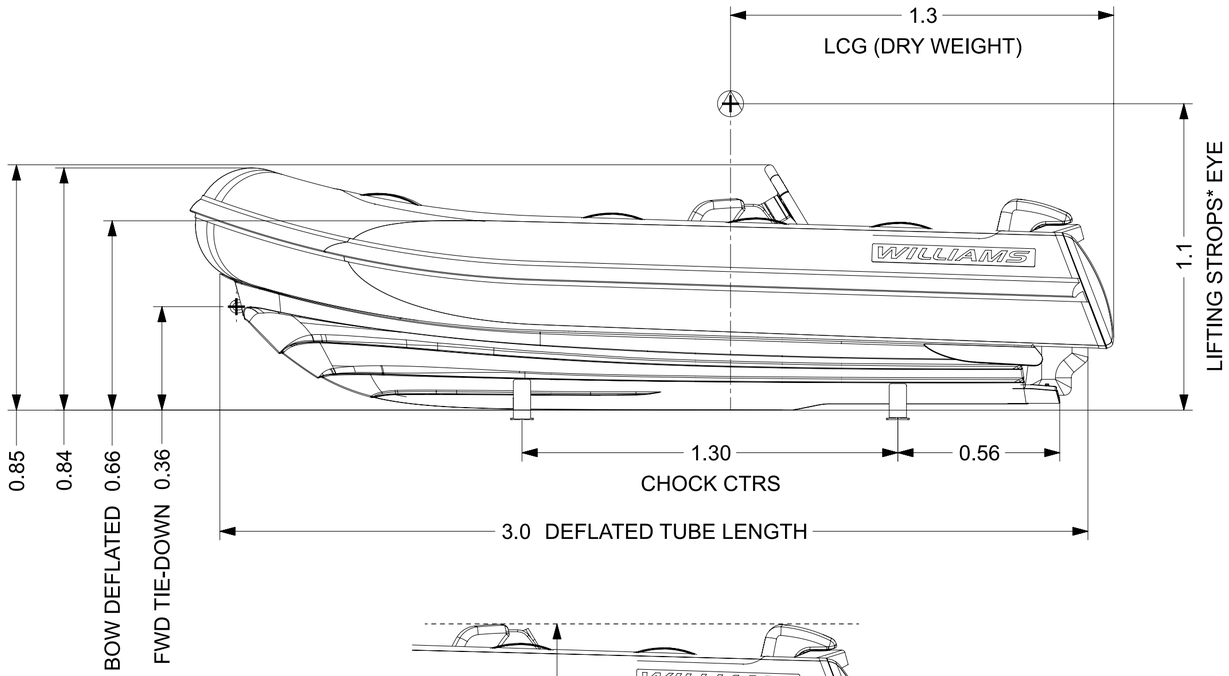

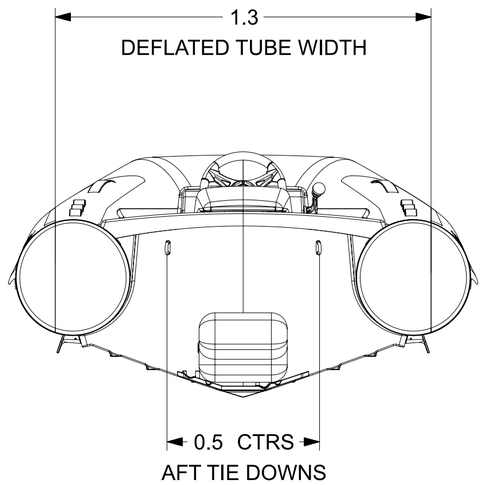

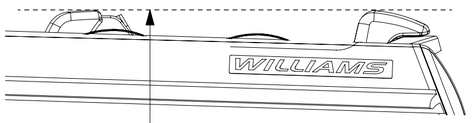

*OPTIONAL ACCESSORY

REV.	DATE	DETAILS	DRAWN	APPV'D
1	22/05/2026	DOCUMENT PRODUCTION	FZ	AM

NOT FOR PUBLICATION - THIS DRAWING IS THE PROPERTY OF WILLIAMS JET TENDERS LTD. AND IS ISSUED ON CONDITION THAT IT IS NOT COPIED, RE-PRINTED OR DISCLOSED EITHER WHOLLY OR IN PART TO ANY THIRD PARTY NOT AUTHORISED TO RECIEVE IT

GENERAL TOL.
0 ±0.50
0.0 ±0.25
0.00 ±0.10
0° ±0.50°

REMOVE ALL BURRS & BREAK SHARP EDGES
GENERAL SURFACE FINISH Ra 1.6UM
DIMENSIONS IN MM UNLESS STATED
DO NOT SCALE DRAWING

	NAME	DATE
DRAWN	FZ	22/05/2026
APPV'D	AM	22/05/2026

PROJECT:
INSPECTION LEVEL:
MATERIAL & FINISH
-
-

WILLIAMS

TITLE
TURBOJET MX 320 (2027MY)

PART NO.
WPT-000320TJMX2027MY-DATASHEET_dwg1
A2

SCALE 1:15
SHEET 1 OF 1